UNIPHOS

UNIPHOS
KwikSense Digital Smart Gas Transmitter

KwikSense Digital Smart Gas Transmitter

KwikSense digital smart gas transmitter is a field mountable device suitable for the detection and continuous monitoring of hazardous gases at industrial plant locations.

Apart from providing an RS-485 MODBUS-RTU digital output signal, that can be connected to a suitable control system, such as a Uniphos controller, DCS, PLC, etc, it also provides an industry standard 4-20 mA analog output.

KwikSense is available for a large variety of toxic and flammable gases, such as O2, combustibles (%LEL), CO, H_2S, SO_2, Cl_2, NH_3, HCN, HCl, NO_2, etc.

SALIENT FEATURES:

- 8x2 backlit alphanumeric LCD display
- Non-intrusive calibration using magnetic wand
- Sensor life indicator
- Tricolor LED for various alarm indications
- Configurable on-board potential free relay contact
- Industry standard 4-20mA analog signal output (soft tuneable)
- Inbuilt 3 potential free relay contacts
- Inbuilt ambient temperature sensor
- User settable alarm set-points
- Provision to mute relay output
- Self testing of alarm LEDs and relays
- Indication for no sensor, over-range, baseline drift
- Digital communication by RS-485 (MODBUS RTU)
- Swappable sensor technology

APPLICATION AREAS

- Refineries
- Petrochemical plants
- Pharmaceutical plants
- Power industries
- Pollution monitoring

EXPLODED VIEW OF **KwikSense**

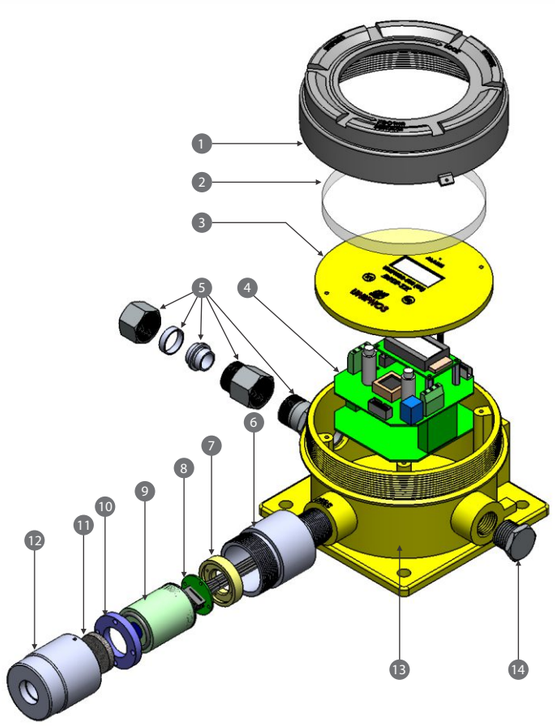

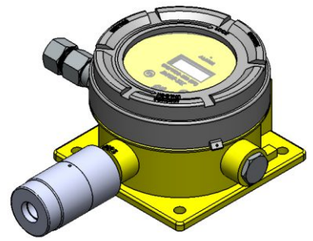

1. Top cover of the Exd-certified enclosure
2. Toughened glass
3. Overlay
4. Electronic circuit board
5. Exd certified cable gland assembly
6. Sensor adaptor
7. Sensor communication PCB holder
8. Sensor communication PCB
9. Gas sensor (smart-swappable module)
10. Filter holding ring
11. SS filter
12. Top cover of the sensor adaptor
13. Exd certified flame proof enclosure (with 4 nos for PC13 mounting holes provision)
14. Exd certified stopper (SS316)

DESCRIPTION

KwikSense consists of two parts, viz. Digital Transmitter & Smart Gas Sensor Module. The smart gas sensor module contains a gas sensing element/ transducer and the necessary electronics to store the calibration data in its memory. This makes it independent of transmitter module and can work on any Uniphos make digital transmitter. The transmitter recognizes the smart sensor and all the data stored in it and functions accordingly for the programmed gas.

The Digital transmitter is housed in an explosion proof ("Exd" certified) wall mountable enclosure and is virtually maintenance-free. Its revolutionary design utilizes advanced micro-controller and non-volatile memory devices that allow for enhanced diagnostics and fault analysis. Advanced design features make installation and operation simpler and user friendly.

Normally, only a periodic calibration and bump check is needed to assure dependable performance. Field interchangeable plug-in sensor module enables users to replace the calibrated gas sensor module at ease & as per their requirements on the site. Sensor module from the transmitter requiring calibration can be sent to the laboratory for calibration.

Gas sensor modules are available for many gases of interest (Please refer Table). These modules include one of the following sensor technologies viz. Electro-chemical detector, Non dispersive Infrared detector, Catalytic bead detector, Photo-ionization detector, Semiconductor thin film detector, etc.

SMART SENSOR MODULES AVAILABLE FOR GASES

Gas Name	Gas Codes	Range	Resolution	Sensor Technology
Acetylene	099C	0 - 100% LEL	1% LEL	Pellister
Acrylonitrile	024A	0 - 100 PPM*	1 PPM	EC
Ammonia	082A	0 - 100 PPM	1 PPM	EC
Ammonia	082B	0 - 1000 PPM	1 PPM	EC
Bromine	061A	0 - 20 PPM	0.1 PPM	EC
Butanol	099D	0 - 100% LEL	1% LEL	Pellister
Carbon Dioxide	025A	0 - 5% V/V	0.01% V/V	NDIR
Carbon Dioxide	025B	0 - 100% V/V	1% V/V	NDIR
Carbon Disulfide	021A	0 - 100 PPM	1 PPM	EC
Carbon Monoxide	020A	0 - 1000 PPM	1 PPM	EC
Chlorine	060A	0 - 20 PPM	0.1 PPM	EC
Formaldehyde	098A	0 - 10 PPM*	1 PPM	EC
HC (Methane)	099A	0 - 100% LEL	1% LEL	Pellister
HC (Methane)	099G	500 - 10000 PPM*	10 PPM	Solid State
Hydrogen	090A	0 - 1000 PPM	1 PPM	EC
Hydrogen	090B	0 - 100% LEL	1% LEL	EC
Hydrogen	090C	0 - 100% LEL	1% LEL	Pellister
Hydro Carbon	099H	50 - 1000 PPM *	1 PPM	Solid State
Hydrogen Cyanide	075A	0 - 100 PPM	1 PPM	EC
Hydrogen Chloride	070A	0 - 20 PPM	0.1 PPM	EC
Hydrogen Fluoride	072A	0 - 10 PPM	0.1 PPM	EC
Hydrogen Sulphide	030A	0 - 100 PPM	1 PPM	EC
LPG	099B	0 - 100% LEL	1% LEL	Pellister
Methane	099E	0 - 100% LEL	1% LEL	NDIR
Methane	099F	0- 100% V/V	1% V/V	NDIR
Mercaptan	035A	0 - 20 PPM	0.1 PPM	EC
Nitrogen Dioxide	081A	0 - 20 PPM	0.1 PPM	EC
Oxygen	010A	0 - 25% V/V	0.1% V/V	EC
Ozone	015A	0 - 1 PPM	0.01 PPM	EC
Pcl_3	071A	0 - 10 PPM*	1 PPM	EC
Phosphine	050A	0 - 10 PPM	0.01 PPM	EC
Phosgene	055A	0 - 1 PPM	0.01 PPM	EC
$POCl_3$	073A	0 - 20 PPM*	1 PPM	EC
Styrene	023A	0 - 100 PPM*	1 PPM	EC
Sulphur Dioxide	040A	0 - 20 PPM	0.1 PPM	EC
Vinyl Chloro Monomer	022A	0 - 100 PPM*	1 PPM	EC
VOC (Isobutylene)	100A	0 - 1000 PPM	1 PPM	PID
VOC (Isobutylene)	100B	0 - 4000 PPM	1 PPM	PID

EC: Electro Chemical, NDIR: Non Dispersive Infra Red, PID: Photo Ionization Detection
Note : Pl. contact us for any other special gas requirements other than that specified in the table.
* Please consult factory for further information

SPECIFICATIONS

Operating voltage: 18 to 28 VDC (Typically: 24 VDC)

Power Consumption: Less than 3 watt

Enclosure: Flame proof, cast aluminium alloy/SS 316

Cable entries: ½" NPT (2 entries)

Size: 230mm x 220mm x 120mm

Weight: 2.5 Kg (Approx.)

3-wire cable system:
Wire 1: Supply voltage
Wire 2: signal 4 - 20 mA
Wire 3: return ground

Recommended cable specifications: 3 core copper wire, shielded armored cable R-12 ohm/Km per core and C - 0.15 mFd per Km and reactance 0.107 ohms/Km

Output signal: Industry standard 4 - 20 mA sourcing (Cable load driving capacity : 650 ohm maximum) RS - 485 (MOD - BUS) on 4 core cable

Sensor: Provision for smart-swappable gas sensor; which are available for Oxygen, combustible gases and toxic gases

Operating Temperature: -20°C to 50°C

Operating Pressure Range: Ambient +/- 10%

Operating Humidity Range: 0-95% RH (non- condensing)

Standards complied: EN/IS/IEC: 60079-0
EN/IS/IEC: 60079-1

Relay contacts: Resistive load

Toughened glass window provision

Mounting: Suitable for mounting on walls or poles or similar support.

Exd Certified cable glands provision

SS-316 Sensor adaptor

Body Coating: Epoxy coating or PU color coating

ORDERING INFORMATION FOR DIGITAL TRANSMITTER AND SMART SENSOR

DIGITAL TRANSMITTER

Digital Transmitter with 4-20mA O/P, Modbus & Relay	DT 500-1M

SMART SENSOR

Model Name	Gas Code
SS-500	XXXX
Example	SS 500-XXXX
Smart Oxygen Sensor	SS 500-010A

CERTIFICATIONS

- CCOE & CIMFR certified to Exd IIC, T6, IP66 (Cat. no. UJB20130)
- ATEX Ex & IECEx certified to
  Ex d IIC T6 Gb (Tamb -20° C to + 40° C)
  Ex d IIC T5 Gb (Tamb -20° C to + 55° C)

UNIPHOS

BR/500DT/EXPORT/V1.0/28032016

Due to continuous development, we reserve the right to change specifications without prior notice.

ISO 9001
BUREAU VERITAS
Certification

IND14.8959U/Q
Email: gasdetection@uniphos-envirotronic.com
Web: www.uniphos-she.com

Manufactured By:
Uniphos Envirotronic Pvt. Ltd
P.O. Nahuli - 396 108
Tal. Umbergaon,
Dist: Valsad, Gujarat, India
Tel. : +91(260) 2730156/57/58
Fax : +91(260) 2730160

Marketing Office:
Uniphos Envirotronic Pvt. Ltd
Readymoney Terrace, 167,
Dr. A. B. Rd, Worli,
Mumbai 400 018, India.
Tel. : +91(22) 6123 3500
Fax : +91(22) 2497 8119.